Kit 1125

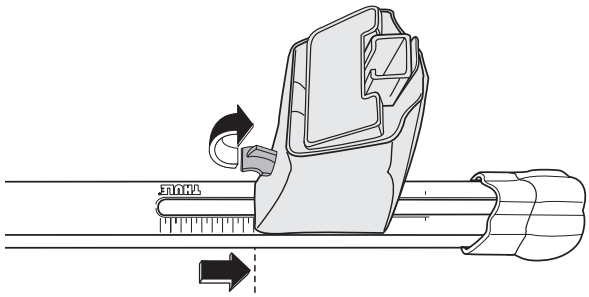

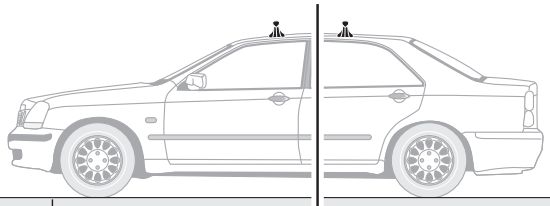

Vehicle	Front	Rear
Toyota Progres, 98–	**36**	**31**

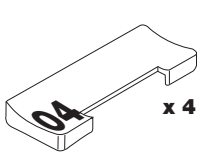

x 4

x 2
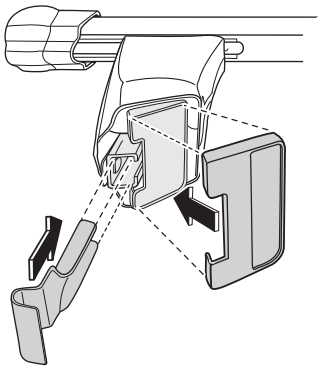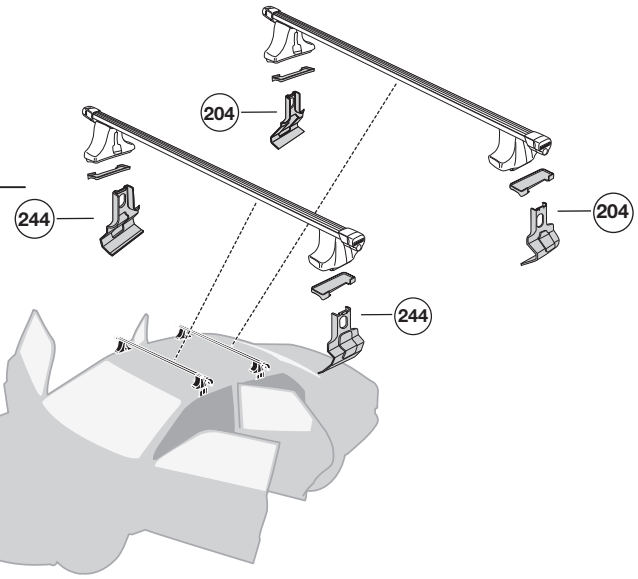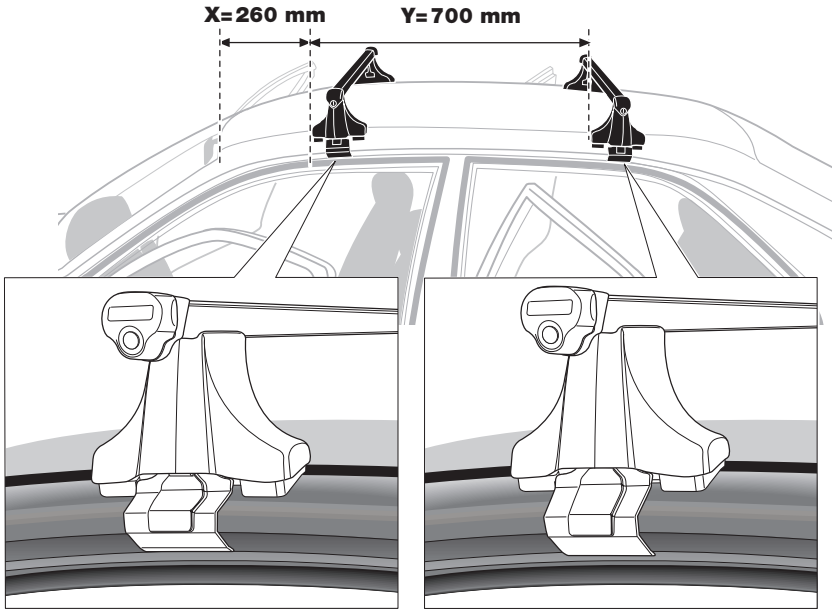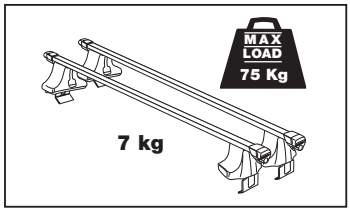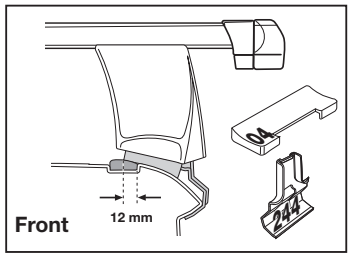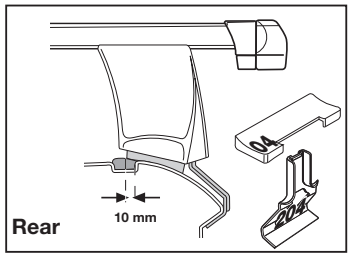
x 2