Thule Sleek Sibling Seat

11000200 - 11000209

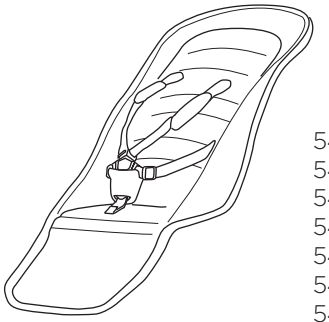

54001 Grey Melange
54002 Midnight Black
54003 Shadow Grey
54004 Energy Red
54005 Navy Blue
54006 Grey Melange UK
54007 Midnight Black UK
54008 Navy Blue UK

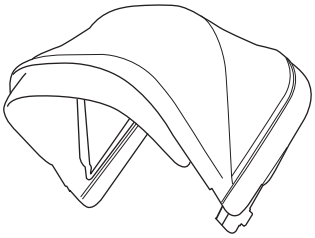

54009 Grey Melange
54010 Midnight Black
54011 Shadow Grey
54012 Energy Red
54013 Navy Blue
54014 Grey Melange UK
54015 Midnight Black UK
54016 Navy Blue UK

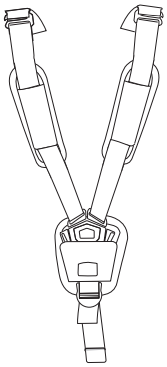

54085 Grey Melange
54086 Midnight Black
54087 Shadow Grey
54088 Energy Red
54089 Navy Blue
54090 Grey Melange UK
54091 Midnight Black UK
54092 Navy Blue UK

54017

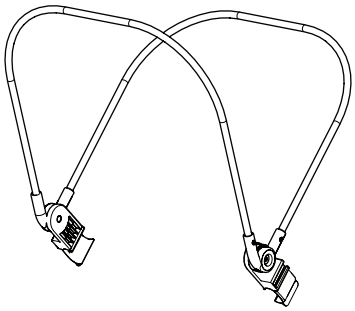

54076

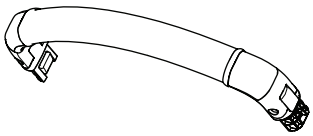

54000

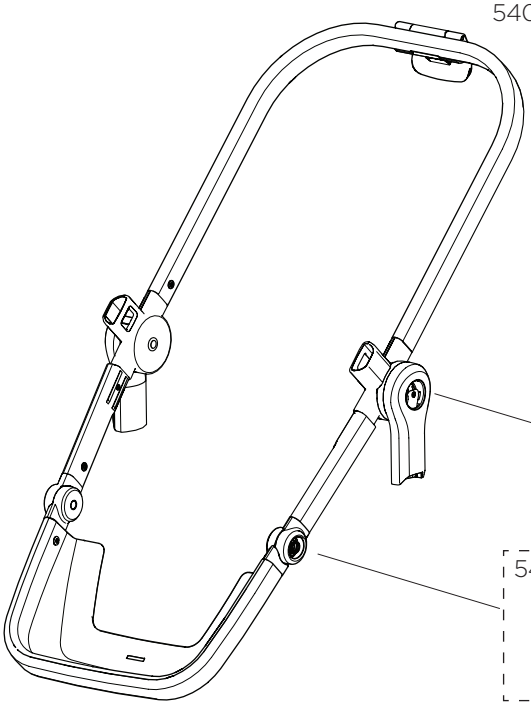

54097

54019